BGL001-877 : Printing detail for Sprint 210, name plate, United energy (Safety Compliance) (REV001)

26

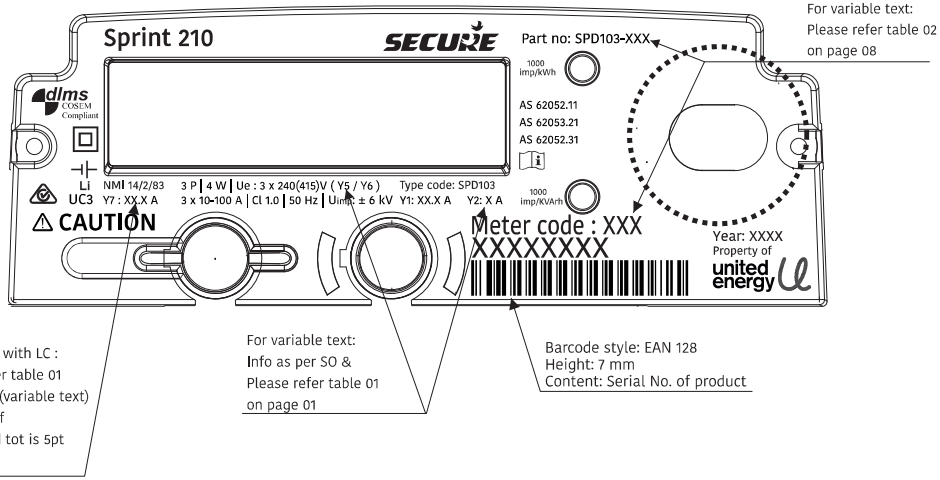

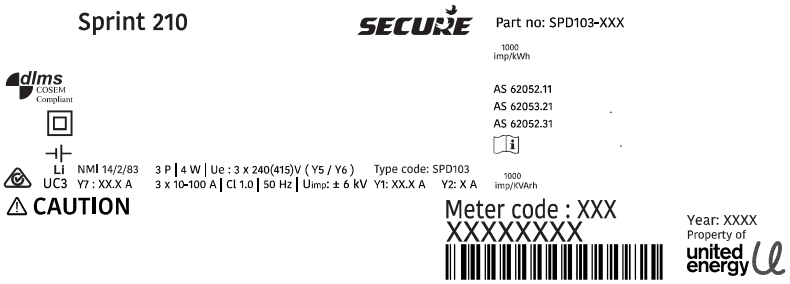

Art work
Scale 1:1

Table 02 :

Catcode Description	SPD103-XXX	Meter code: XXX
No Load control, 1 x 2A relay	006	504
31.5A Load Control, 1 x 2A relay	005	506
No Load control, 3 x 2A relay	NA	NA
31.5A Load Control, no 2A relay	NA	NA
31.5A Load Control, 3 x 2A relay	NA	NA
No Load control, no 2A relay	NA	NA

Rev No.	Date	Revision History (ECR/ ECO/DCO)	Drn.by	Chk.by	Appd. by

Material No:- NA

Material Description:- NA

Volume:- NA

1. Part (Raw materials, Surface treatments and other secondary operations if any) must be RoHS 2 compliant as per EU directive 2011/65/EU & 2015/863/EU.
2. Part must be REACH compliant as per EU REACH regulation no. 1907/2006.

Title :- Reference specification for name plate, (Sprint 210)

Finish:- NA

C.R. 026

Drg. No. PL0552-249

SH 9 OF 9

Size (Org.) A3 | Units : mm | Scale : 1:1 | THIRD ANGLE PROJECTION

NPD-MEC-QF-22
Rev No.003

"THIS DOCUMENT IS CONFIDENTIAL AND COPYRIGHT PROPERTY OF SECURE INTERNATIONAL HOLDINGS PTE. LTD AND SHALL NOT BE DIVULGED, REVEALED, REPRODUCED, COPIED (IN WHOLE OR IN PART) OR USED FOR ANY PURPOSE OTHERTHAN THAT FOR WHICH SUBMITTED. PLESE ASK IN CASE OF ANY DOUBT".

SECURE METERS LIMITED
Engineering Drawing